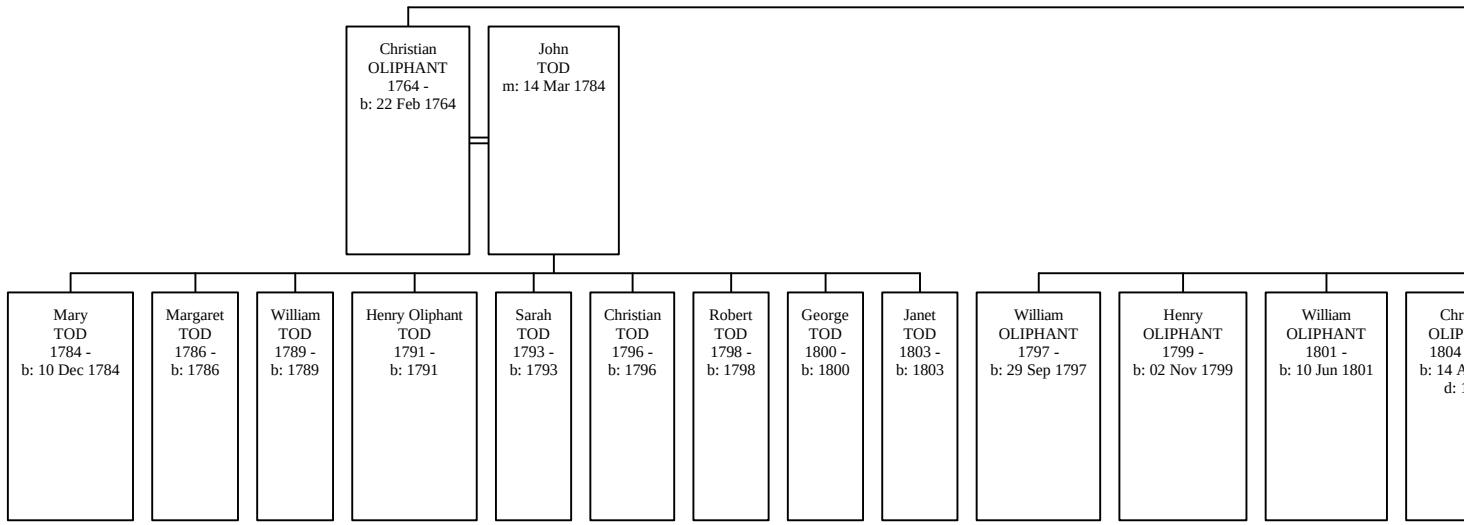
Christian
OLIPHANT
1764 -
b: 22 Feb 1764
John
TOD
m: 14 Mar 1784
Mary
TOD
1784 -
b: 10 Dec 1784
Margaret
TOD
1786 -
b: 1786
William
TOD
1789 -
b: 1789
Henry Oliphant
TOD
1791 -
b: 1791
Sarah
TOD
1793 -
b: 1793
Christian
TOD
1796 -
b: 1796
Robert
TOD
1798 -
b: 1798
George
TOD
1800 -
b: 1800
Janet
TOD
1803 -
b: 1803
William
OLIPHANT
1797 -
b: 29 Sep 1797
Henry
OLIPHANT
1799 -
b: 02 Nov 1799
William
OLIPHANT
1801 -
b: 10 Jun 1801

Descendants of William OLIPHANT

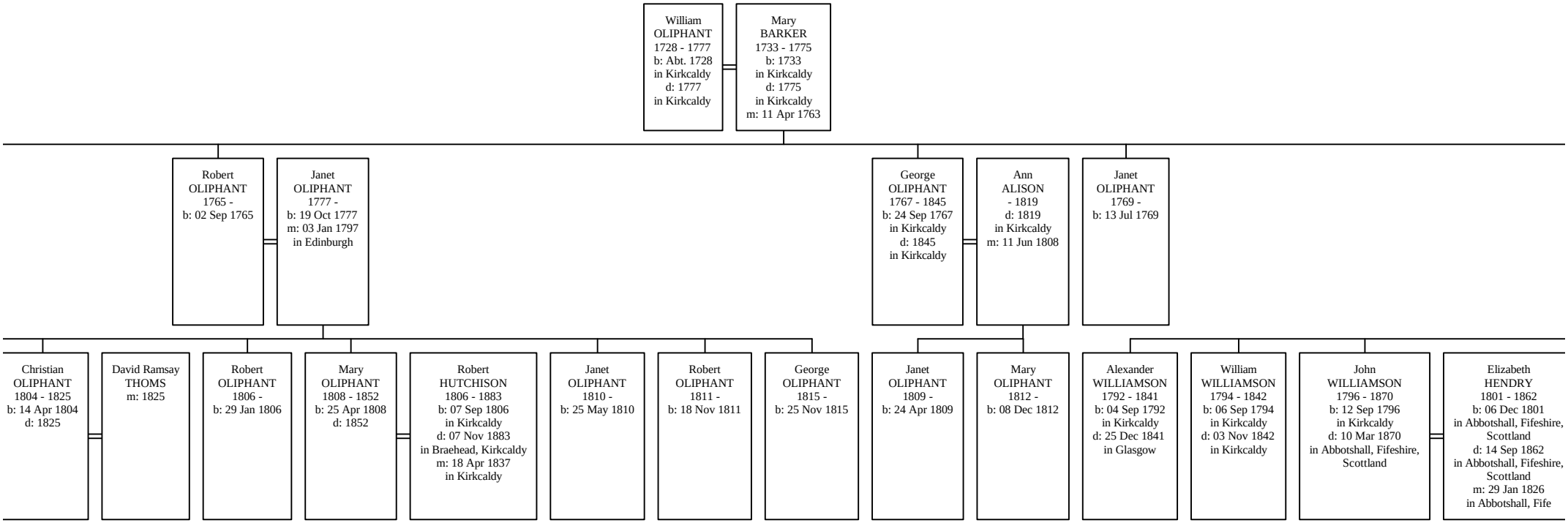

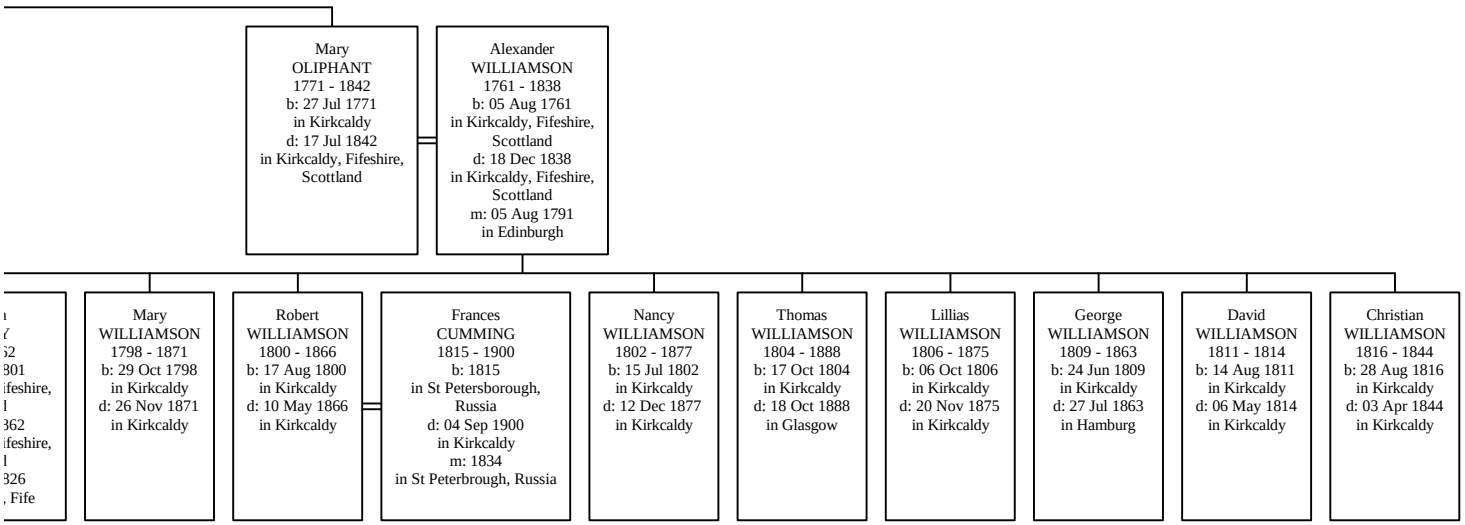
Mary
OLIPHANT
1771 - 1842
b: 27 Jul 1771
in Kirkcaldy
d: 17 Jul 1842
in Kirkcaldy, Fifeshire,
Scottland
Alexander
WILLIAMSON
1761 - 1838
b: 05 Aug 1761
in Kirkcaldy, Fifeshire,
Scottland
d: 18 Dec 1838
in Kirkcaldy, Fifeshire,
Scottland
m: 05 Aug 1791
in Edinburgh
Mary
WILLIAMSON
1798 - 1871
b: 29 Oct 1798
in Kirkcaldy
d: 26 Nov 1871
in Kirkcaldy
Robert
WILLIAMSON
1800 - 1866
b: 17 Aug 1800
in Kirkcaldy
d: 10 May 1866
in Kirkcaldy
Frances
CUMMING
1815 - 1900
b: 1815
in St Petersborough,
Russia
d: 04 Sep 1900
in Kirkcaldy
m: 1834
in St Peterbrough, Russia
Nancy
WILLIAMSON
1802 - 1877
b: 15 Jul 1802
in Kirkcaldy
d: 12 Dec 1877
in Kirkcaldy
Thomas
WILLIAMSON
1804 - 1888
b: 17 Oct 1804
in Kirkcaldy
d: 18 Oct 1888
in Glasgow
Lillias
WILLIAMSON
1806 - 1875
b: 06 Oct 1806
in Kirkcaldy
d: 20 Nov 1875
in Kirkcaldy
George
WILLIAMSON
1809 - 1863
b: 24 Jun 1809
in Kirkcaldy
d: 27 Jul 1863
in Hamburg
David
WILLIAMSON
1811 - 1814
b: 14 Aug 1811
in Kirkcaldy
d: 06 May 1814
in Kirkcaldy
Christian
WILLIAMSON
1816 - 1844
b: 28 Aug 1816
in Kirkcaldy
d: 03 Apr 1844
in Kirkcaldy